40 – 100kW

LOAD BANK SPECIFICATION

Description				
Model		Transportable		Fixed
Country of Origin		United Kingdom		
Max Capacity - Packaged Loadbank		40kW - 100kW		
Voltage Max - Continuous Operation		380V - 415V		
Operating Frequency Range		50Hz		
Phases		3ph		
Wires (Star Connection)		4		
Load-Step Resolution @ Design Voltage Voltage		1kW		
Tolerance (Short Term Operation)		+5%		
Load Element Tolerance		+/-5%		
Elements		80/20 nickel chrome resistance wire		
Insulation Test		500V		
Auxiliary Supply Voltage		220V - 240V		380V- 415V
Operating Frequency Range		50Hz		50Hz
Phases		1ph		3ph
Load Connections		M8 Terminals or Copper Busbars		
Protection		Thermal Emergency Cut Out Fan Overload Emergency Stop		
Control Voltage		Selectable - Test or Auxiliary		
Cooling Method		Forced Air Cooling (Horizontal)		
Air-Flow (Approx.)		85m³/min		
Load Switching Category		AC-1 Resistive		
Load Switching Contactor Type		3 Pole AC Contactors		
Rated Maximum Ambient Temperature Operation		+40°C / +104°F		
Rated Minimum Ambient Temperature Operation		-20°C / -4°F		
Rated Maximum Relative Humidity		95% RH		
Altitude Rating		<500m [m.a.s.l.]		
Enclosure		Sheet Steel		
Finish		RAL9002 Grey White		
Control Chamber IP Rating		IP55		
Lifting		Lifting Eyes x2		
Length (Approx.)	mm	750	750	845
Width (Approx.)	mm	875	875	875
Height (Approx.)	mm	728	675	675
Total Weight (Approx.)	kg	130	130	140
Control		KCS		MCS
Optional Extras:		KCS100H - 10m Lead VIP - Power Meter KCS100L (Local) KCS100R (Remote)		PC Software or LC60 Modbus
		Extendable System		Extend - Standard
Load Connection Type		1-Phase and/or Delta		
Frequency / Connections		60Hz and 3-Wire Connection		
Control Extension Cables		50m or 100m Extension		
Transportation		2-Wheel Trailer Mounted		
Load Connections		Powerlocks		
Protection Cover		Loadbank PVC Cover		
Frame		Crash Pack		

** Permanent installation only*

40kW -100kW AC - Issue 2 - 11/12/17 (Changes to specification may vary without notice)

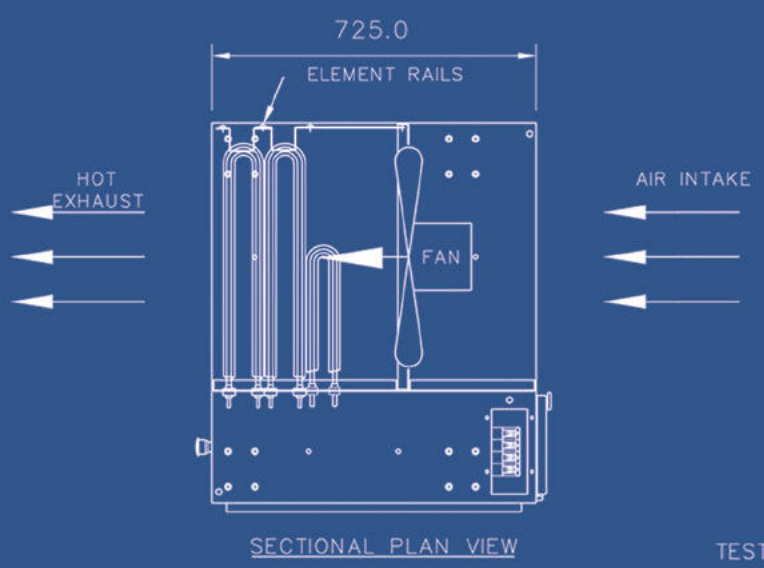

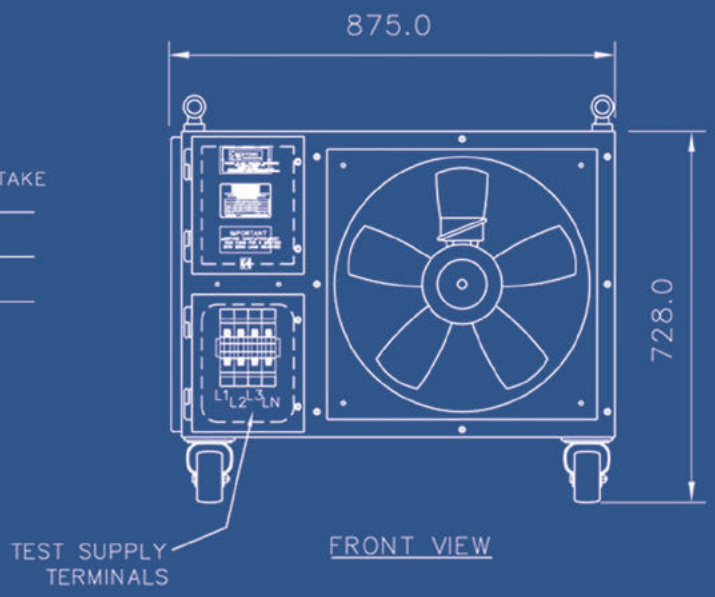

QUALITY WITHOUT COMPRIMISE

Our loadbanks are characterised by one thing above all: quality. At every stage of our supply chain, from raw material to finished item, we work with established, worldclass suppliers and implement our own uncompromising quality control processes to ensure that our products perform better and last longer.

Note: Loadbank pictured with rental crash pack option

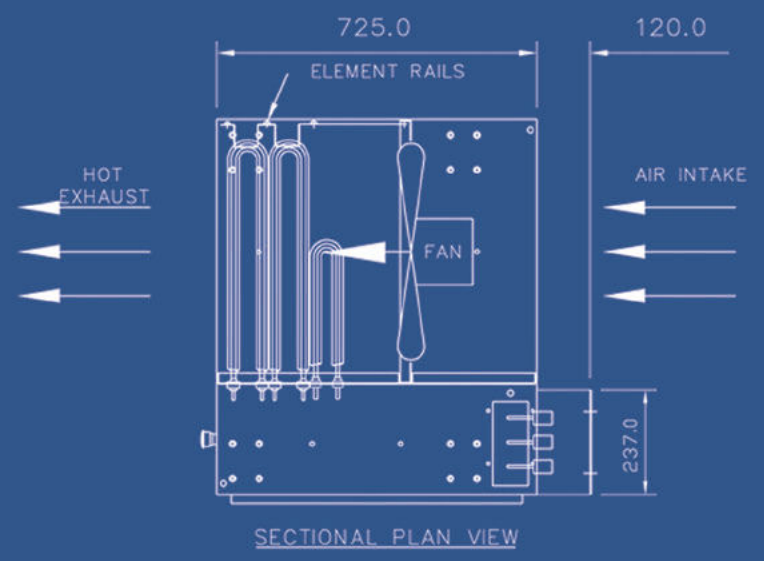

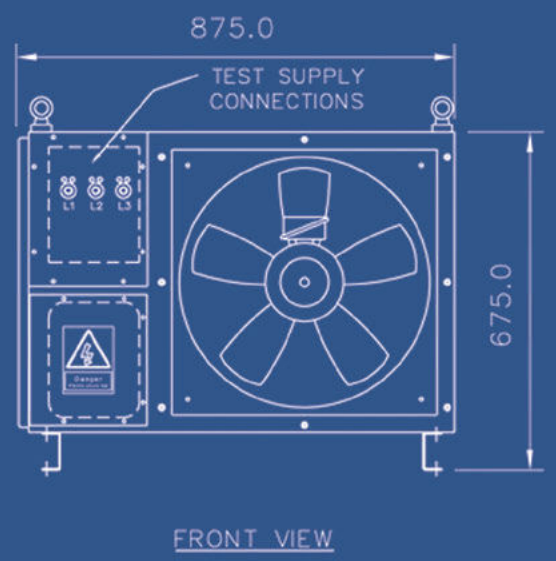

CONTACT US

WB Power Services Ltd, Heanor Gate Road
Heanor Gate Industrial Estate, Heanor
Derbyshire DE75 7RJ

Email us at: sales@wbpsltd.co.uk
Call us 01159 444 422
www.wbpsltd.co.uk/hire